6942

55 litre Total opening drum

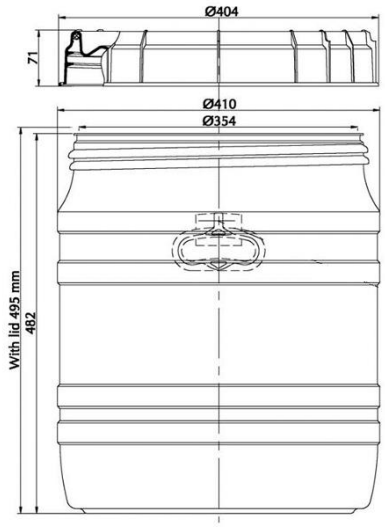

For dimensional tolerances see table on next page

Product part	Product code	Description	Materials
Drum	6942B00-705	55 litre total opening drum	HDPE
Lid	A6970-13-750	Screw lid	HDPE
Gasket	H14-309	Sealing gasket	EPDM
Handle	A6800	Handle	HDPE

Capacity	Litres	US Gallons
Brimful	56	14.8
When closed	55	14.5

Weight	Grams	Ounces
Drum	2100	74.08
Lid	675	23.81
Gasket	37	1.31
Handles	90	3.18
Total	2902	102.36

Colours	Colour code	PMS references
Container	Brown 705	174 C
Lid	Beige 750	482 C
Handle	Black 101	/

Hazardous material information	
Hazardous material type	Solids
Packaging group	I – II – III
UN marking	UN/1H2/X69/S/--/NL/CURTEC 934
Maximum gross mass (kg)	X=69

Product identification	Drum	Lid
Manufacturer ID	Bottom	--
Country of origin	Bottom	--
Product code	Bottom	--
Recycle logo / Material type	Bottom	Inside
Date clock	Bottom	Inside
UN-mark	On side wall	--
Food logo	On bottom	--
Material track clock	Bottom	--

Other information
Maximum filling temperature is 70°C/ 158°F
Contents must have cooled to 30°C/ 86°F before containers can be closed and stacked
DoC available on request
UN certificate available on request
MVTR declaration available on request
Watertightness declaration available on request
Other colours available on request
User manual available on request

Wall thickness	mm
Minimal wall thickness	≥1.9
Nominal wall thickness	≥2.3

Dimensional tolerances	%
Height	±2.5
Diameter	±1.5

Weight tolerance
All products have a tolerance of ±4% on the initial weight mentioned on this data sheet

© 2016 Property of CurTec International B.V. All rights explicitly reserved, it is not allowed to copy or communicate to other parties without written consent of CurTec.

6942

55 litre UV safe drum

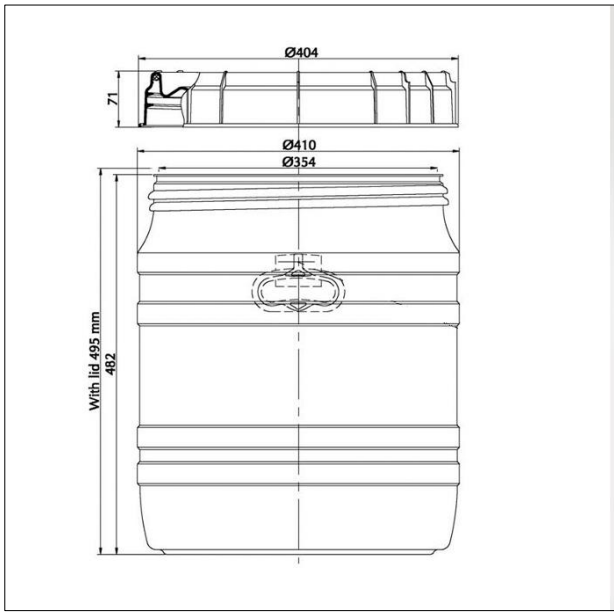

For dimensional tolerances see table on next page

Product part	Product code	Description	Material
Drum	6942B00-101	55 litre total opening drum	HDPE
Lid	A6970-13-101	Screw lid	HDPE
Gasket	H14-309	Sealing gasket	EPDM
Handle	A6800	Handle	HDPE

Capacity	Litres	US Gallons
Brimful	56	14.8
When closed	55	14.5

Weight	Grams	Ounces
Drum	2100	74.08
Lid	675	23.81
Gasket	37	1.31
Handles	90	3.18
Total	2902	102.36

Colours	Colour code	PMS references
Container	Black 101	/
Lid	Black 101	/
Handle	Black 101	/

Hazardous material information	
Hazardous material type	Solids
Packaging group	I – II – III
UN marking	UN/1H2/X69/S/--/NL/CURTEC 934
Maximum gross mass (kg)	X=69

Product identification	Container	Lid
Manufacturer ID	Bottom	--
Country of origin	Bottom	--
Product code	Bottom	--
Recycle logo / Material type	Bottom	Inside
Date clock	Bottom	Inside
UN-mark	On side wall	--
Food logo	On bottom	--
Material track clock	Bottom	--

Other information
Maximum filling temperature is 70°C/ 158°F
Contents must have cooled to 30°C/ 86°F before containers can be closed and stacked
DoC available on request
UN certificate available on request
MVTR declaration available on request
Watertightness declaration available on request
User manual available on request

Wall thickness	mm
Minimal wall thickness	≥1.9
Nominal wall thickness	≥2.3

Dimensional tolerances	%
Height	±2.5
Diameter	±1.5

Weight tolerance
All products have a tolerance of ±4% on the initial weight mentioned on this data sheet

© 2016 Property of CurTec International B.V. All rights explicitly reserved, it is not allowed to copy or communicate to other parties without written consent of CurTec.

6943

64 litre Total opening drum

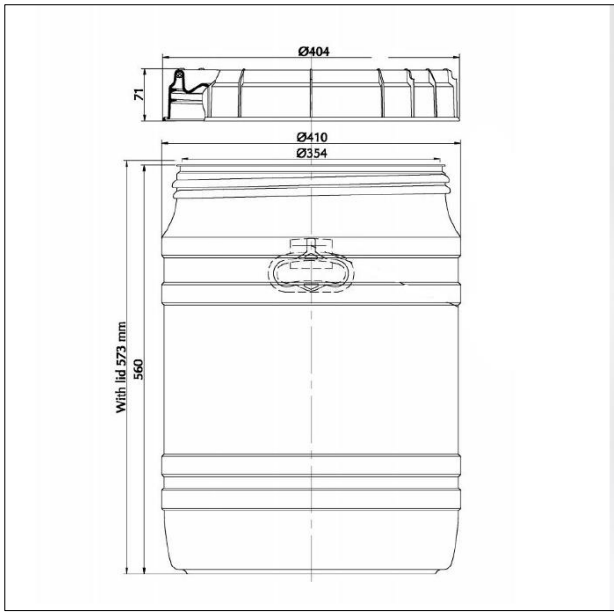

For dimensional tolerances see table on next page

Product part	Product code	Description	Materials
Drum	6943B01-705	64 litre total opening drum	HDPE
Lid	A6970-13-750	Screw lid	HDPE
Gasket	H14-309	Sealing gasket	EPDM
Handle	A6800	Handle	HDPE

Capacity	Litres	US Gallons
Brimful	67	17.7
When closed	64	16.9

Weight	Grams	Ounces
Drum	2400	84.66
Lid	675	23.81
Gasket	37	1.31
Handles	90	3.18
Total	3202	112.95

Colours	Colour code	PMS references
Container	Brown 705	174 C
	White 004	/
Lid	Beige 750	482 C
	Red 402	199 C
Handle	Black 101	/

Hazardous material information	
Hazardous material type	Solids
Packaging group	I – II – III
UN marking	UN/1H2/X81/S/--/NL/CURTEC 936
Maximum gross mass (kg)	X=81

Product identification	Drum	Lid
Manufacturer ID	Bottom	--
Country of origin	Bottom	--
Product code	Bottom	--
Recycle logo / Material type	Bottom	Inside
Date clock	Bottom	Inside
UN-mark	On side wall	--
Food logo	On bottom	--
Material track clock	Bottom	--

Other information
Maximum filling temperature is 70°C/ 158°F
Contents must have cooled to 30°C/ 86°F before containers can be closed and stacked
DoC available on request
UN certificate available on request
MVTR declaration available on request
Watertightness declaration available on request
Other colours available on request
User manual available on request

Wall thickness	mm
Minimal wall thickness	≥2.2
Nominal wall thickness	≥2.5

Dimensional tolerances	%
Height	±2.5
Diameter	±1.5

Weight tolerance
All products have a tolerance of ±4% on the initial weight mentioned on this data sheet

© 2016 Property of CurTec International B.V. All rights explicitly reserved, it is not allowed to copy or communicate to other parties without written consent of CurTec.

6944-68-101

75 litre conductive total opening drum

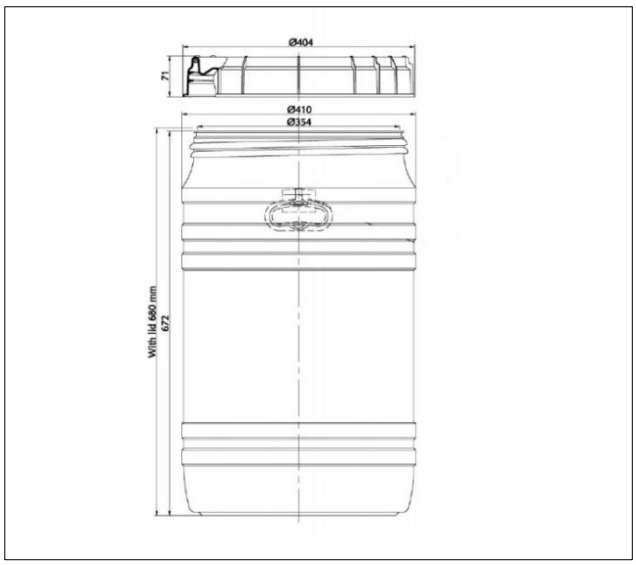

For dimensional tolerances see table on next page

Product part	Product code	Description	Materials
Drum	6944B02-101	75 litre total opening drum conductive	HDPE
Lid	A6970-29-101	Screw lid	HDPE
Gasket	H14-309	Sealing gasket	EPDM
Handle	A6800	Handle	HDPE

Capacity	Litres	US Gallons
Brimful	79.5	21
When closed	75	19.8

Weight	Grams	Ounces
Drum	3.087	108.90
Lid	709	25.01
Gasket	37	1.31
Handles	90	3.18
Total	3.923	138.40

Colours	Colour code	PMS references
Container	Black 101	/
Lid	Black 101	/
Handle	Black 101	/

Hazardous material information	
Hazardous material type	Solids
Packaging group	I – II – III
UN marking	UN/1H2/X95/S/--/NL/CURTEC - 070063
Maximum gross mass (kg)	X=95 Y=142 Z=213

Product identification	Drum	Lid
Manufacturer ID	Bottom	--
Country of origin	Bottom	--
Product code	Bottom	--
Recycle logo / Material type	Bottom	Inside
Date clock	Bottom	Inside
UN-mark	On side wall	--
Food logo	--	--
Material track clock	Bottom	--

Other information
All conductive drums offer have a surface resistivity ≤ 10^6 Ohm.All kegs are air and water tight
All kegs can be made temper evident with application of compact seal # 7800.
Maximum filling temperature is 70°C/ 158°F
Contents must have cooled to 30°C/ 86°F before containers can be closed and stacked
UN certificate available on request
MVTR declaration available on request
Watertightness declaration available on request
User manual available on request

Wall thickness	mm
Minimal wall thickness	≥2.5
Nominal wall thickness	≥2.7

Dimensional tolerances	%
Height	±2.5
Diameter	±1.5

Weight tolerance
All products have a tolerance of ±4% on the initial weight mentioned on this data sheet

© 2016 Property of CurTec International B.V. All rights explicitly reserved, it is not allowed to copy or communicate to other parties without written consent of CurTec.

6944

75 litre Total opening drum

For dimensional tolerances see table on next page

Product part	Product code	Description	Materials
Drum	6944B00-705	75 litre total opening drum	HDPE
Lid	A6970-13-750	Screw lid	HDPE
Gasket	H14-309	Sealing gasket	EPDM
Handle	A6800	Handle	HDPE

Capacity	Litres	US Gallons
Brimful	79.5	21
When closed	75	19.8

Weight	Grams	Ounces
Drum	2940	103.71
Lid	675	23.81
Gasket	37	1.31
Handles	90	3.18
Total	3742	131.99

Colours	Colour code	PMS references
Container	Brown 705	174 C
	White 004	/
Lid	Beige 750	482 C
	Black 101	/
	Red 402	199 C
Handle	Black 101	/

Hazardous material information	
Hazardous material type	Solids
Packaging group	I – II – III
UN marking	UN/1H2/X95/S/--/NL/CURTEC 2418
Maximum gross mass (kg)	X=95

Product identification	Drum	Lid
Manufacturer ID	Bottom	--
Country of origin	Bottom	--
Product code	Bottom	--
Recycle logo / Material type	Bottom	Inside
Date clock	Bottom	Inside
UN-mark	On side wall	--
Food logo	On bottom	--
Material track clock	Bottom	--

Other information
Maximum filling temperature is 70°C/ 158°F
Contents must have cooled to 30°C/ 86°F before containers can be closed and stacked
DoC available on request
UN certificate available on request
MVTR declaration available on request
Watertightness declaration available on request
Other colours available on request
User manual available on request

Wall thickness	mm
Minimal wall thickness	≥2.5
Nominal wall thickness	≥2.7

Dimensional tolerances	%
Height	±2.5
Diameter	±1.5

Weight tolerance
All products have a tolerance of ±4% on the initial weight mentioned on this data sheet

© 2016 Property of CurTec International B.V. All rights explicitly reserved, it is not allowed to copy or communicate to other parties without written consent of CurTec.

6945

17 litre Total opening drum

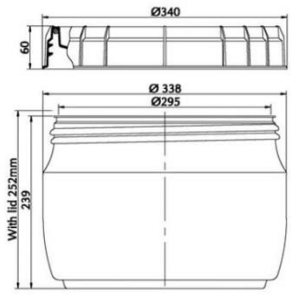

For dimensional tolerances see table on next page

Product part	Product code	Description	Materials
Drum	6945B00-004	17 litre total opening drum	HDPE
Lid	A6950-13-402	Screw lid	HDPE
Gasket	H14-325	Sealing gasket	EPDM

Capacity	Litres	US Gallons
Brimful	17.9	4.7
When closed	17	4.5

Weight	Grams	Ounces
Drum	800	28.22
Lid	374	13.19
Gasket	26	0.92
Total	1200	42.33

Colours	Colour code	PMS references
Container	White 004	/
Lid	Red 402	199 C
	Blue 680	3015 C

Hazardous material information	
Hazardous material type	Solids
Packaging group	I – II – III
UN marking	UN/1H2/X25/S/--/NL/CURTEC 360
Maximum gross mass (kg)	X=25

Product identification	Drum	Lid
Manufacturer ID	Bottom	--
Country of origin	Bottom	--
Product code	Bottom	--
Recycle logo / Material type	Bottom	Inside
Date clock	Bottom	Inside
UN-mark	On side wall	--
Food logo	On bottom	--
Material track clock	Bottom	--

Other information
Maximum filling temperature is 70°C/ 158°F
Contents must have cooled to 30°C/ 86°F before containers can be closed and stacked
DoC available on request
UN certificate available on request
MVTR declaration available on request
Watertightness declaration available on request
Other colours available on request
User manual available on request

Wall thickness	mm
Minimal wall thickness	≥1.5
Nominal wall thickness	≥2.0

Dimensional tolerances	%
Height	±2.5
Diameter	±1.5

Weight tolerance
All products have a tolerance of ±4% on the initial weight mentioned on this data sheet

© 2016 Property of CurTec International B.V. All rights explicitly reserved, it is not allowed to copy or communicate to other parties without written consent of CurTec.

6947

26 litre Total opening drum

For dimensional tolerances see table on next page

Product part	Product code	Description	Materials
Drum	6947B01-004	26 litre total opening drum	HDPE
Lid	A6950-13-402	Screw lid	HDPE
Gasket	H14	Sealing gasket	EPDM
Handle	A6800	Handle	HDPE

Capacity	Litres	US Gallons
Brimful	27.2	7.2
When closed	26	6.7

Weight	Grams	Ounces
Drum	1070	37.74
Lid	374	13.19
Gasket	26	0.92
Handles	90	3.18
Total	1560	55.03

Colours	Colour code	PMS references
Container	White 004	/
Lid	Red 402	199 C
Handle	Black 101	/

Hazardous material information	
Hazardous material type	Solids
Packaging group	I – II – III
UN marking	UN/1H2/X38/S/--/NL/CURTEC 360
Maximum gross mass (kg)	X=38

Product identification	Drum	Lid
Manufacturer ID	Bottom	--
Country of origin	Bottom	--
Product code	Bottom	--
Recycle logo / Material type	Bottom	Inside
Date clock	Bottom	Inside
UN-mark	On side wall	--
Food logo	On bottom	--
Material track clock	Bottom	--

Other information
Maximum filling temperature is 70°C/ 158°F
Contents must have cooled to 30°C/ 86°F before containers can be closed and stacked
DoC available on request
UN certificate available on request
MVTR declaration available on request
Watertightness declaration available on request
Other colours available on request
User manual available on request

Wall thickness	mm
Minimal wall thickness	≥1.5
Nominal wall thickness	≥2.0

Dimensional tolerances	%
Height	±2.5
Diameter	±1.5

Weight tolerance
All products have a tolerance of ±4% on the initial weight mentioned on this data sheet

© 2016 Property of CurTec International B.V. All rights explicitly reserved, it is not allowed to copy or communicate to other parties without written consent of CurTec.

6948

39 litre Total opening drum

For dimensional tolerances see table on next page

Product part	Product code	Description	Materials
Drum	6948B00-004	39 litre total opening drum	HDPE
Lid	A6950-13-402	Screw lid	HDPE
Gasket	H14-325	Sealing gasket	EPDM

Capacity	Litres	US Gallons
Brimful	40.2	10.6
When closed	39	10.3

Weight	Grams	Ounces
Drum	1420	50.09
Lid	374	13.19
Gasket	26	0.92
Total	1820	64.20

Colours	Colour code	PMS references
Container	White 004	/
Lid	Red 402	199 C

Hazardous material information	
Hazardous material type	Solids
Packaging group	I – II – III
UN marking	UN/1H2/X48/S/--/NL/CURTEC 286
Maximum gross mass (kg)	X=48

Product identification	Drum	Lid
Manufacturer ID	Bottom	--
Country of origin	Bottom	--
Product code	Bottom	--
Recycle logo / Material type	Bottom	Inside
Date clock	Bottom	Inside
UN-mark	On side wall	--
Food logo	On bottom	--
Material track clock	Bottom	--

Other information
Maximum filling temperature is 70°C/ 158°F
Contents must have cooled to 30°C/ 86°F before containers can be closed and stacked
DoC available on request
UN certificate available on request
MVTR declaration available on request
Watertightness declaration available on request
Other colours available on request
User manual available on request

Wall thickness	mm
Minimal wall thickness	≥1.5
Nominal wall thickness	≥2.0

Dimensional tolerances	%
Height	±2.5
Diameter	±1.5

Weight tolerance
All products have a tolerance of ±4% on the initial weight mentioned on this data sheet

© 2016 Property of CurTec International B.V. All rights explicitly reserved, it is not allowed to copy or communicate to other parties without written consent of CurTec.

6950

34 litre Total opening drum

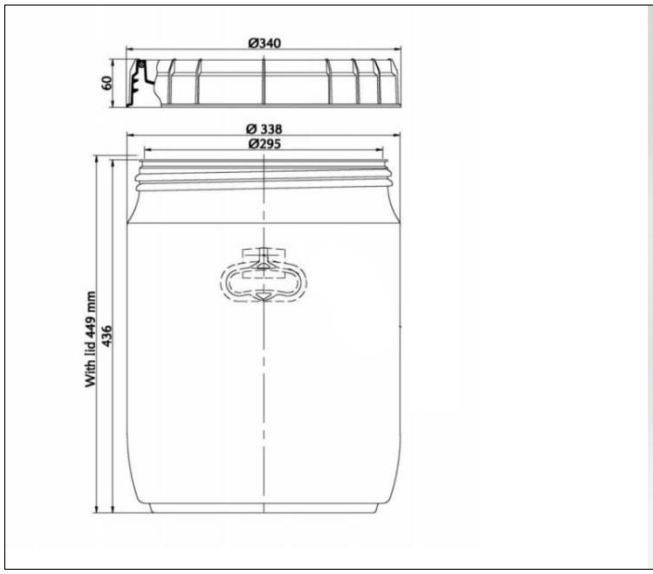

For dimensional tolerances see table on next page

Product part	Product code	Description	Materials
Drum	6950B01-004	34 litre total opening drum	HDPE
Lid	A6950-13-402	Screw lid	HDPE
Gasket	H14-325	Sealing gasket	EPDM
Handle	A6800	Handle	HDPE

Capacity	Litres	US Gallons
Brimful	34.9	9.2
When closed	34	9

Weight	Grams	Ounces
Drum	1380	48.68
Lid	374	13.19
Gasket	26	0.92
Handles	90	3.18
Total	1870	65.96

Colours	Colour code	PMS references
Container	White 004	/
Lid	Red 402	199 C
Handle	Black 101	/

Hazardous material information	
Hazardous material type	Solids
Packaging group	I – II – III
UN marking	UN/1H2/X48/S/--/NL/CURTEC 286
Maximum gross mass (kg)	X=48

Product identification	Drum	Lid
Manufacturer ID	Bottom	--
Country of origin	Bottom	--
Product code	Bottom	--
Recycle logo / Material type	Bottom	Inside
Date clock	Bottom	Inside
UN-mark	On side wall	--
Food logo	On bottom	--
Material track clock	Bottom	--

Other information
Maximum filling temperature is 70°C/ 158°F
Contents must have cooled to 30°C/ 86°F before containers can be closed and stacked
DoC available on request
UN certificate available on request
MVTR declaration available on request
Watertightness declaration available on request
Other colours available on request
User manual available on request

Wall thickness	mm
Minimal wall thickness	≥1.5
Nominal wall thickness	≥2.0

Dimensional tolerances	%
Height	±2.5
Diameter	±1.5

Weight tolerance
All products have a tolerance of ±4% on the initial weight mentioned on this data sheet

© 2016 Property of CurTec International B.V. All rights explicitly reserved, it is not allowed to copy or communicate to other parties without written consent of CurTec.

6994

110 litre Total opening drum

For dimensional tolerances see table on next page

Product part	Product code	Description	Materials
Drum	6994B01-004	110 litre total opening drum	HDPE
Lid	A6990-23-402	Screw lid	HDPE
Gasket	H14-311	Sealing gasket	EPDM
Handle	A6800	Handle	HDPE

Capacity	Litres	US Gallons
Brimful	115	30.4
When closed	110	29

Weight	Grams	Ounces
Drum	3800	134.04
Lid	740	26.10
Gasket	44	1.55
Handles	90	3.18
Total	4674	164.87

Colours	Colour code	PMS references
Container	White 004	/
	Brown 705	174 C
Lid	Red 402	199 C
	Beige 750	482 C
Handle	Black 101	/

Hazardous material information	
Hazardous material type	Solids
Packaging group	I – II – III
UN marking	UN/1H2/X90/S/--/B/CURTEC-060100
Maximum gross mass (kg)	X=90 Y=135 Z=180

Product identification	Drum	Lid
Manufacturer ID	Bottom	--
Country of origin	Bottom	--
Product code	Bottom	--
Recycle logo / Material type	Bottom	Inside
Date clock	Bottom	Inside
UN-mark	On side wall	--
Food logo	Bottom	--
Material track clock	Bottom	--

Other information
Maximum filling temperature is 70°C/ 158°F
Contents must have cooled to 30°C/ 86°F before containers can be closed and stacked
DoC available on request
UN certificate available on request
MVTR declaration available on request
Watertightness declaration available on request
Other colours available on request
User manual available on request

Wall thickness	mm
Minimal wall thickness	≥2.3
Nominal wall thickness	≥2.7

Dimensional tolerances	%
Height	±2.5
Diameter	±1.5

Weight tolerance
All products have a tolerance of ±4% on the initial weight mentioned on this data sheet

© 2016 Property of CurTec International B.V. All rights explicitly reserved, it is not allowed to copy or communicate to other parties without written consent of CurTec.